MODEL NO.	PACKAGING
134-1000-018	ONE PCS PER BAG

REV	ECO	DATE
001	ECO-17-0033	12/18/2017

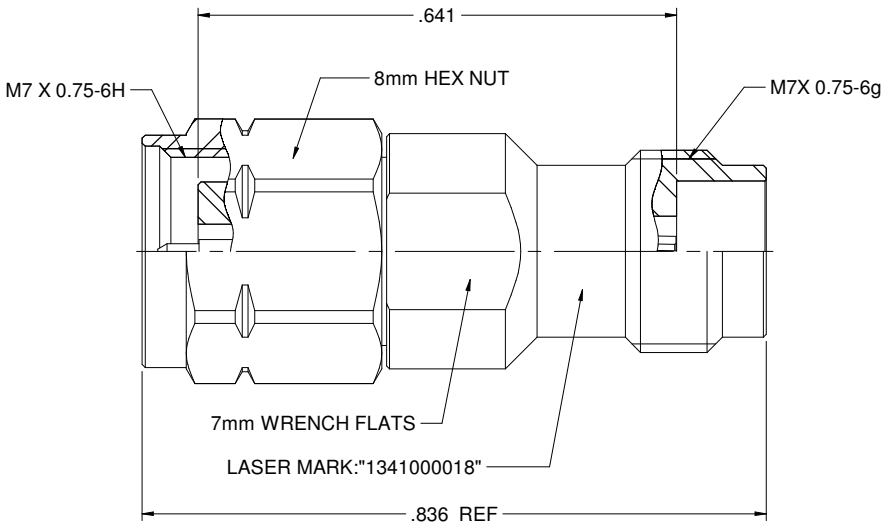

NOTES: UNLESS OTHERWISE SPECIFIED

1. MATERIAL & FINISH:
   1.1 BODY & SHELL: PASSIVATED STAINLESS STEEL
   1.2 CONTACT PIN : GOLD PLATED BERYLLIUM COPPER
   1.3 INSULATOR: ULTEM 1000 AMBER
   1.4 GASKET: SILICONE RED
   1.5 C RING: BERYLLIUM COPPER

2. ELECTRICAL:
   2.1 IMPEDANCE: 50 OHMS
   2.2 FREQUENCY RANGE: 0-50 GHz
   2.3 DIELECTRIC WITHSTANDING VOLTAGE: 500 VRMS MIN
   2.4 VOLTAGE STANDING WAVE RATIO: DC- 26.5GHZ: 1.06 MAX
   26.5- 40 GHZ: 1.10 MAX
   40 - 50 GHZ: 1.15 MAX
   2.5 CONTACT RESISTANCE: CENTER CONTACT: 4 MILLIOHMS MAX
   OUTER CONTACT: 2.5 MILLIOHMS MAX
   2.6 INSULATION RESISTANCE: 5000 MOHM MIN

3. MECHANICAL:
   3.1 ENGAGEMENT/ DISENGAGEMENT FORCE: 0.23 NM MAX
   3.2 COUPLING PROOF TORQUE: 1.65NM MIN (1.85MM)
   3.3 COUPLING NUT RETENTION FORCE: 267 N MIN (1.85MM)
   3.4 CONTACT RETENTION: 20 N MIN
   3.5 DURABILITY: 500 CYCLES MIN

4. ENVIRONMENT:
   4.1 THERMAL SHOCK: MIL-STD-202, METHOD 107, CONDITION B.
   4.2 OPERATING TEMPERATURE: -55 TO 125℃
   4.3 SALT SPRAY: MIL-STD-202, METHOD 101, CONDITION B
   4.4 SHOCK: MIL-STD-202, METHOD 213, CONDITION I
   4.5 VIBRATION: MIL-STD-202, METHOD 204, CONDITION D
   4.6 MOISTURE RESISTANCE: MIL-STD-202, METHOD 106

cinch connectivity solutions

This PROPRIETARY Document is property of Cinch Connectivity Solutions. Information herein, which is NON-TRADEABLE, and/or NON-SECRET, is your understanding that it is not to be reproduced or transmitted without expressed written permission.

INTERPRET DRAWING IN ACCORDANCE WITH ASME Y14.5-2009

Model No. 134-1000-018		Johnson
RoHS2 ☑ 2011/65/EU	Cage Code	Title: ADAPTER ASSEMBLY,1.85mm PLUG TO 2.4mm JACK
UNLESS OTHERWISE SPECIFIED UNITS INCH	3RD ANGLE PROJECTION	Drawing No. 134-1000-018 — Rev. 001
.XXX ±.02 .XXXX ±.01 ANGLES ±5°	Drawn by: Betty.Yu	
	Date: 12/12/2017	Size C — DO NOT SCALE DRAWING — Workmanship Std NONE — Sheet 1 of 1