THIS DRAWING IS UNPUBLISHED. RELEASED FOR PUBLICATION -,- .
© COPYRIGHT – BY TYCO ELECTRONICS CORPORATION. ALL RIGHTS RESERVED.

LOC	DIST
G	02

REVISIONS

P	LTR	DESCRIPTION	DATE	DWN	APVD
	R1	REV PER ECR-06-001930	13FEB06	HMR	TM

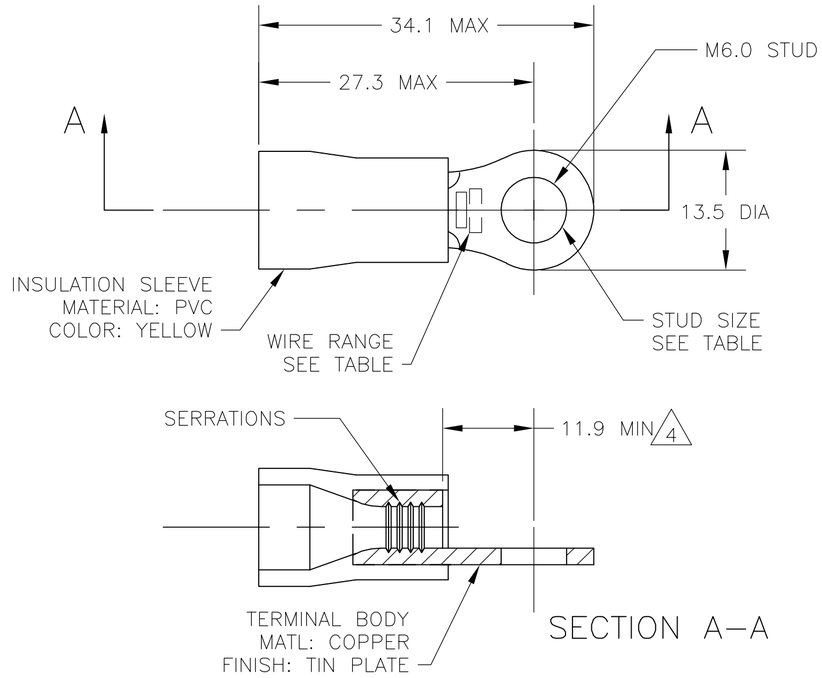

1 WIRE SIZE IS 12–10 AWG

2 WIRE INSULATION DIA: 3.8–6.4

3 MATERIAL THICKNESS IS 1.0

4 DIMENSION APPLIES FROM EDGE OF METAL WIRE BARREL TO END OF PIN.

5 SUPERSEDED BY 342185–1

PACKAGING	LABELLING	QTY	PART NO
POLY BAG WITH HEADER	STANDARD	50	5 7–342185–1
PLASTIC BOX	STANDARD	50	5 6–342185–1
TAPED MOUNTED	STANDARD	2500	2–342185–1
PLASTIC BAG	STANDARD	500	342185–1

THIS DRAWING IS A CONTROLLED DOCUMENT.

DIMENSIONS: INCHES

TOLERANCES UNLESS OTHERWISE SPECIFIED:

0 PLC	±	–
1 PLC	±	0.5
2 PLC	±	–
3 PLC	±	–
4 PLC	±	–
ANGLES	±	1°

MATERIAL –

FINISH –

DWN jr ruth 02DEC05
CHK T MICHIELUTTI 02DEC05
APVD T MICHIELUTTI 02DEC05
PRODUCT SPEC –
APPLICATION SPEC –
WEIGHT –

tyco Electronics
Tyco Electronics Corporation
Harrisburg, PA 17105–3608

NAME TERMINAL, RING TONGUE, PLASTI–GRIP, – –

SIZE	CAGE CODE	DRAWING NO	RESTRICTED TO
A2	00779	C–342185	–

CUSTOMER DRAWING | SCALE 5:1 | SHEET 1 OF 1 | REV R1

342185