Alle Rechte vorbehalten/ *All rights reserved*

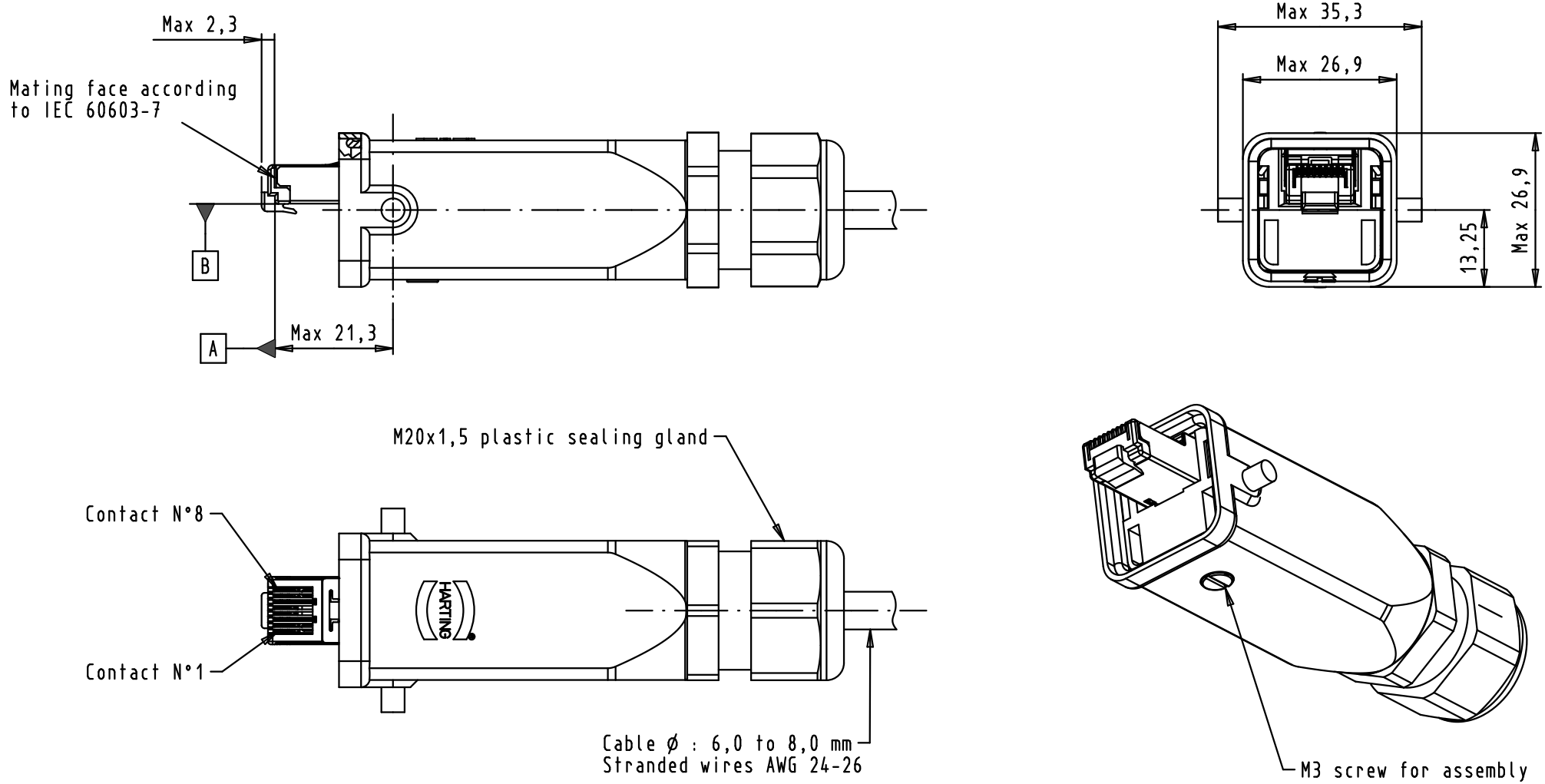

Data contacts plating: Au 1,27µm over Nickel

Part number	Wires manager colour	Mod.	Dat.	Name
09 45 125 1510	Data connector with blue wires manager	34903	27/03/08	PK
09 45 125 1500	Data connector with white wires manager	34761	07/10/07	BD
		36295	21/03/12	SD

	Dat.	Name
Detail.	07/10/07	BD
Insp.		
Stand.		

All Dim. in mm
Orig. Size DIN A 4

RJ INDUSTRIAL
IP67 thermoplastic
HAN 3A plug with
8 data contacts

Maßstab/ *Scale* 1:1

HARTING EURL
F-95972 Paris

TB 09 45 125 15X0

Sub.

Blatt/ *Page* 1/1